NUHOMS® 69BTH DSC

AREVA TN's NUHOMS® 69BTH Dry Shielded Canister (DSC) provides customers with a high-capacity, high-burnup, high-heat load system for BWR dry used fuel storage needs. The 69BTH DSC is very similar to the NUHOMS® 61BT DSC, which is AREVA TN's most widely used BWR dry storage system. The 69BTH DSC is designed to store and transport 69 BWR fuel assemblies with or without channels. Twenty-four of these assemblies can be damaged fuel handled by normal means.

The 69BTH DSC is a design optimized for plants with minimum crane capacity of 120 tons. It can be transferred in the NUHOMS® OSTC series transfer cask to gain the benefit of being fully shielded. This is an important occupational dose advantage over other designs that have to be transferred in a lightweight transfer cask with higher surface dose rates. The 69BTH DSC is transferred and stored in a horizontal configuration using the NUHOMS® HSM-H or HSM-HS concrete modules. The 69BTH DSC can also be stored in a vertical orientation in the NUHOMS® TN-NOVA Overpack.

The 69BTH stainless steel basket consists of tubular fuel compartments grouped together and wrapped by over-sleeves to form 9-compartment and 6-compartment assemblies. The compartment assemblies are connected to perimeter aluminum transition rail assemblies. Geometric spacing and fixed neutron absorbers are used to maintain criticality control. The 69BTH basket and DSC assembly incorporates the proven NUHOMS® weld design that has been used in numerous loaded canisters in the United States.

Damaged fuel that can be handled by normal means can also be stored in the 69BTH DSC. The canister uses unique end caps to confine the damaged fuel assembly inside the basket cell, thus eliminating the need for canning the fuel assembly.

Under CoC 9302, the 69BTH DSC is licensed for transportation in the MP197HB — the high-burnup version of AREVA TN's MP197 transport cask.

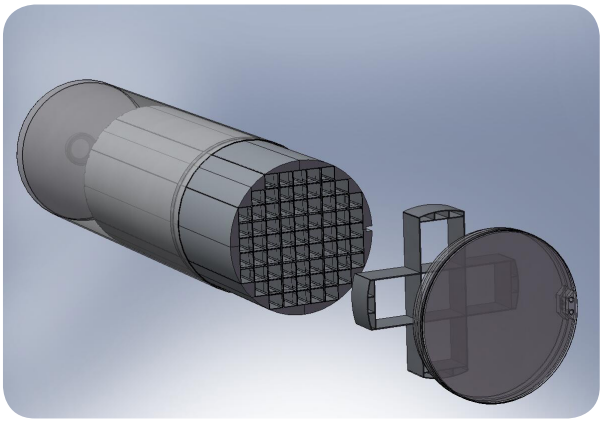

About AREVA TN

AREVA TN, a division of AREVA Inc., is a leader in the American nuclear market offering innovative total systems solutions for used fuel and radioactive waste management and transportation. More than 50 percent of American nuclear plant operators use AREVA TN's used fuel storage or transport solutions, irradiated waste removal and processing, and pool to pad services.

As part of AREVA, the global leader in nuclear technology, AREVA TN offers the industry an unparalleled level of engineering, technical and logistics expertise.

AREVA TN's track record of providing safe storage and transportation of used fuel is driven by state-of-the-art products and services, innovative engineering solutions, and integrity in meeting customer expectations for low-dose and error-free campaigns. AREVA TN customers include utilities, reactor operators, research reactors and the U.S. government.

AREVA TN's products are marked by the highest standard of safety, uncompromising commitment to quality and operational dependability, and "as promised" service integrity.

AREVA
forward-looking energy

Technical Features

Product Capabilities:

Maximum Payload
- 69 BWR Assemblies
- 24 Damaged Fuel Assemblies

Reconstituted Fuel Assemblies

MOX Fuel Assemblies

Intact/Damaged Fuel with or w/o Channels

Fuel Assemblies w/ Blended Low Enriched Uranium (BLEU)

Materials of Construction:

Stainless Steel Shell and Cover Plates

Coated Carbon Steel Shield Plugs

Carbon Steel Bottom Shield Plug

Stainless Steel/Aluminum Basket Assembly

Neutron Poison Material
- Borated Aluminum
- Boral® Core Matrix
- Metal Matrix Composites (MMC)

Physical Dimensions:

Outside Diameter – 69.75 inches

Outside Length – 197 inches

Cavity Length – 179.5 inches

Weight, Dry Loaded – 104,000 lbs

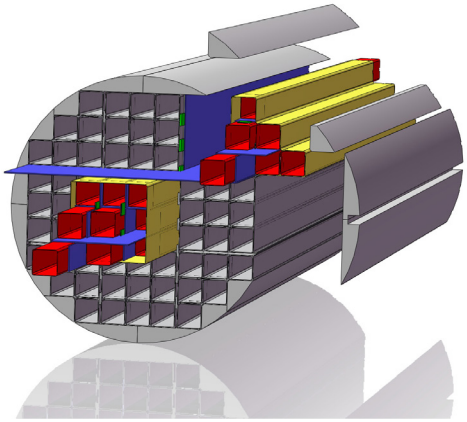

Intact Fuel:

Zircaloy Cladding Material

Max. Initial Enrichment – 5 wt% U235

Min. Initial Enrichment – 0.7 wt% U235

Min. Cooling time – 3 yrs

Max. Burnup – 70 GWd/MTU

Max. Decay Heat – 700 W/Assembly

Max. Heat Load – 24 to 35 kW

Max. Uranium Content – 198 kg/Assembly

Max. Assembly Weight – 705 lbs

Max. Assembly Length (unirradiated) – 176.6 inches

Damaged Fuel

Damaged BWR fuel assemblies contain fuel rods with known or suspected cladding defects greater than hairline cracks or pinhole leaks that can be handled by normal means. These damaged fuel assemblies are stored with top and bottom end caps.

Features and Benefits

- Designed to meet BWR dry used fuel storage and transport needs
- Optimal design for plants with crane capacity of 120 tons or larger
- Leverages proven closure weld design
- Eliminates canning of damaged fuel
- Offers dry and fully shielded transfer cask

AREVA TN Americas

Jeffery Isakson, VP, Sales & Marketing
7135 Minstrel Way, Suite 300
Columbia, MD 21045 USA
Tel: 410 910 6810
www.us.areva.com/AREVATN

For more information,
contact your VP, Key Account:
Tel: 704 805 2305 – Fax: 434 382 5629
regional.manager@areva.com – www.us.areva.com

NUHOMS® is a registered trademark of AREVA TN. The data and information contained herein are provided solely for illustration and informational purposes and create no legal obligations by AREVA TN. None of the information or data is intended by AREVA TN to be a representation or a warranty of any kind, expressed or implied, and AREVA TN assumes no liability for the use of or reliance on any information or data disclosed in this document. ©2014 AREVA Inc. All rights reserved.

6/14 **ANP:U-293-V4-14-ENG**