Jet Pump Beam Inspection

Simple, Reliable Pole-Delivered UT Inspection

Inspection transducers conform to the Jet Pump Beam surface, minimizing schedule impact for component inspection.

Innovative Tool Detects Cracking Throughout Entire Transition Region of Beam

Utilities want innovative ultrasonic solutions that detect cracks in the entire transition area of their jet pump beams. With its global resources, AREVA provides the Jet Pump Beam Inspection Tool (JPBIT) to help you ensure top plant performance

A Proven, Time-Saving Solution for Challenging Inspections

Incorporating field-proven technology and a practical design, the enhanced JPBIT is an adaptation of AREVA's Jet Pump Beam Ultrasonic System. The enhanced JPBIT is a stationary fixture, and is easily delivered with standard poles from either a refueling bridge, auxiliary bridge or work platform. In preparation for inspection, the tool is centered on the jet pump beam bolt and aligned from the sides of the hold-down beam. The examination fixture is designed to position each of the transducers at a predetermined location to provide examination coverage of the regions of interest.

During inspection, three transducers are moved along two linear slides above the beam's surface. Two of the transducers inspect down the taper of the beam, while the third inspects up the taper of the beam. Two stationary immersion transducers simultaneously inspect the target areas of both the beam-bolt thread area and the ear-end area. Qualification testing has shown the tool capable of inspecting the beam-bolt thread area, up and down the 25-degree taper, the beam's radii edges and horizontal surfaces of the beam. In addition, all data are recorded so they can be retrieved and plotted for site documentation and future reference. This progressive approach delivers complete inspection of the beam's surface area.

A New Standard in Efficiency and Reliability

To decrease inspection time and increase inspection coverage area, AREVA's JPBIT provides a complete evaluation of your beams' material condition. With unparalleled accuracy and efficiency, it's no wonder the new JPBIT has been deemed an "Industry Best." Make informed and proactive decisions regarding costly replacements — and eliminate worrying about jet pump beam failure. Plus, because of its practical design and ease of installation, JPBIT can typically inspect all 20 beams in only 12 to 14 hours.

Features and Benefits

- Satisfies all inspection requirements
- Increases inspection coverage to include entire transition area of beam
- Reduces critical path time
- Practical design ensures reliable, cost-effective operation
- Provides valuable input and flexibility for long-term replacement options

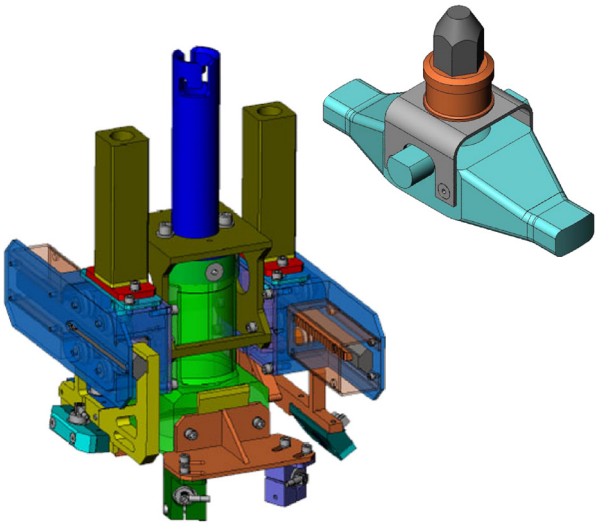

AREVA
forward-looking energy

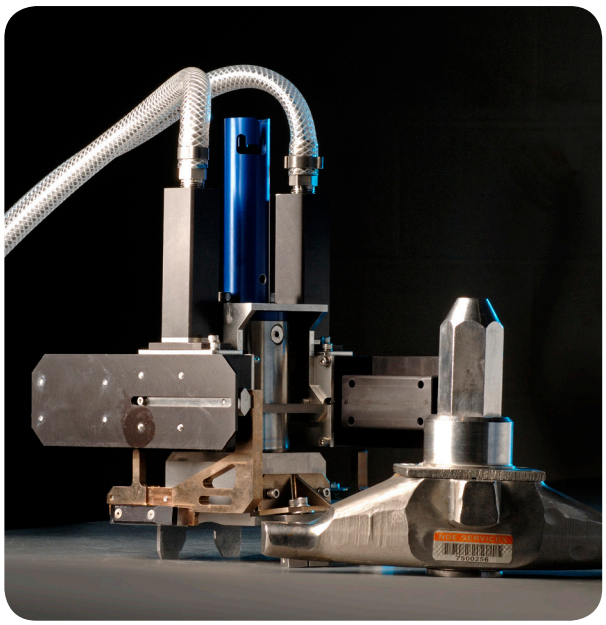

Practical design enables efficient operation — inspect up to 20 beams per 12-hour shift.

For more information contact AREVA NDE-Solutions Regional Sales Manager at
regional.manager@areva.com

U.S.: Eddie Ivins
Office: +1 434 832 3781 Cell: +1 434 841 3562

France: Olivier Moulin
Office: +33 14 978 4095 Cell: +33 62 879 6555

Germany: Florian Senne
Office: +49 9131 900 96766 Cell: +49 151 14568545

The data and information contained herein are provided solely for illustration and informational purposes and create no legal obligations by AREVA. None of the information or data is intended by AREVA to be a representation or a warranty of any kind, expressed or implied, and AREVA assumes no liability for the use of or reliance on any information or data disclosed in this document. © 2013 AREVA Inc. All rights reserved.

7/13 **ANP:U-041-V4-13-ENG**